PoWer ARC Series

GeKaMac®

PoWer ARC 500

Users Manual

Please Read and Understand This Manual
Before Operating The Welding Machine

www.gedikwelding.com

This machine is for internal use only.

It complies with the WEEE Directive.

This machine has been designed in accordance with the EN 60974-1 and EN 60974-10 standards.

The machine is safe when installation, operation, and maintenance are performed in accordance with the user manual and regulations. The operator and machine owner are responsible for adhering to safety rules.

Gedik Kaynak San. Ve Tic. A.Ş. assumes no responsibility for safety or CE compliance if any modifications are made to the machine or if safety rules are not followed.

This Class A equipment is not suitable for use in homes and similar residential areas where the power supply is provided by the low-voltage public electricity network.

This machine is not household waste and cannot be disposed of in the trash.

When the machine reaches the end of its service life or becomes obsolete, it must be disposed of in accordance with regulations.

COMPLIES WITH THE WEEE DIRECTIVE.

Eco Design Statement

This machine has been designed and manufactured in accordance with the requirements of the 2009/125/EC Eco Design Directive concerning the environmentally friendly design of energy-related products.

Accordingly, machines with an idle mode are as follows.

	Idle Mode
MMA	**X**
MIG	√
TIG	√
Plazma	√
SAW	**Out of Scope**

Efficiency measurements should be conducted only on the power unit. The water cooling system should be disabled. For more information on measurements and machine settings, Gedik Kaynak Sanayi ve Ticaret A.Ş. should be consulted.

Gedik
since 1963

AT UYGUNLUK BEYANI

EU DECLARATION OF CONFORMITY

Bu uygunluk beyanı yalnızca imalatçının sorumluluğu altında düzenlenir.

This declaration of conformity is issued under the sole responsibility of the manufacturer.

İstanbul, Turkey, 08.03.2024

İmalatçı / Manufacturer

GEDİK KAYNAK SANAYİ ve TİCARET A.Ş.

Ankara Cad. No.306 Seyhli Pendik ISTANBUL TURKIYE

Ürün / Product	ARC WELDING MACHINE
Marka-Model / Brand- Model	POWER ARC 500

Yukarıda tanımlanan beyanın nesnesi ilgili uyumlaştırılmış AB mevzuatı ile uyumludur.

The object of the declaration described above, is in conformity with the relevant union harmonisation legislation.

Direktifler / Directives 2014/30/EU & 2014/35/EU & 2009/125/EC

Uyumlaştırılmış standartlar ve uygunluğun deklare edilmesiyle ilişkili diğer referanslar.

References to the relevant harmonised standarts used and references to the other technical specifications in relation to which conformity is declared.

EN IEC 60974-1:2018+A1:2019
EN IEC 60974-10:2021

Bu ekipman, talimatlara uygun kurulduğunda, bakımı yapıldığında ve kullanıldığında belirtilen standartlara uygundur. Makine üzerinde bir değişiklik yapıldığında veya yanlış kullanımda deklarasyon geçersiz olur.

The equipment is in compliance with pertinent legislation when installed, utilized, and maintained in accordance with the enclosed instructions. This declaration will be invalid under any modification or improper use.

İmalatçı Adına imzalayan / Signed for and on behalf of:

Hatice Özel, Equipment Business Unit Director

Dear Customer

This instruction manual will help you get to know your new machine. Read the manual carefully and you will soon be familiar with all the many great features of your new product. Meanwhile, please remember well safety rules and operate as instruction.

If you treat your product carefully, this definitely helps to prolong its enduring quality and reliability things which are both essential prerequisites for getting outstanding results.

Production specification may change without advance notice.
The model you purchase is:

☐ **PoWer ARC 500**

Please find corresponding models from the "Contents".

Important:
Please take special note of safety rules and operate as instruction in case of damage and serious injury.

Safety Rules

“Danger” indicates an imminently hazardous situation which, if not avoided, will result in death or serious injury.

“Warning!” indicates a possible hazardous situation which, if not avoided, could result in death or serious injury. The possible hazards are explained in the text.

“Caution” indicates a possible hazardous situation which, if not avoided, may result in slight or moderate injury.

“Note!” indicates a situation which implies a risk of impaired welding result and damage to the equipment.

Utilisation for intended purpose only

- The machine may only be used for jobs as defined by the “Intended purpose”.
- Utilisation for any other purpose, or in any other manner, shall be deemed to be “not in

accordance with the intended purpose”. The manufacturer shall not be liable for any
damage resulting from such improper use.

Safety signs

- All the safety instructions and danger warnings on the machine must be kept in legible condition, not removed, not be covered, pasted or painted cover.

Safety inspection

- The owner/operator is obliged to perform safety inspection at regular intervals.
- The manufacturer also recommends every 3-6 months for regular maintenance of power sources.

Electric shock can kill

- Touching live electrical parts can cause fatal shocks or severe burns. The electrode and work circuit is electrically live whenever the output is on. The input power circuit and machine internal circuits are also live when power is on. In MIG/MAG welding, the wire, drive rollers, wire feed housing and all metal parts touching the welding wire are electrically live. Incorrectly installed or improperly grounded equipment is a hazard.
- Do not touch live electrical parts of the welding circuit, electrodes and wires with your bare skin or wet clothing.
- The operator must wear dry hole-free insulating welding gloves and body protection while performs the welding.
- Insulate yourself from work and ground using dry insulating protection which is large enough to prevent you full area of physical contact with

the work or ground.

- Connect the primary input cable according to rules. Disconnect input power or stop machine before installing or maintenance.
- If welding must be performed under electrically hazardous conditions as follow: in damp locations or wearing wet clothing; on metal structures such as floors, gratings, or scaffolds; when in cramped positions such as sitting, kneeling, or lying; or in occasion when there is a high risk of unavoidable or accidental contact with the work piece or ground. Must use additional safety precautions: semiautomatic DC constant voltage (wire) welder, DC manual (Stick) welder and AC welder with reduced open-load voltage.
- Maintain the electrode holder, ground clamp, welding cable and welding machine in good, safe operating condition. Replace damaged part immediately.

Electric and magnetic fields (EMF)may be dangerous

- If electromagnetic interference is found to be occurring, the operator is obliged to examine any possible electromagnetic problems that may occur on equipment as follow:

- minas, signal and data-transmission leads
- IT and telecoms equipment
- measurement and calibration devices
- Wearers of pacemakers

- Measures for minimizing or preventing EMC problems:

– Mains supply

If electromagnetic interference still occurs, despite the fact that the mains connection in accordance with the regulations, take additional measures

– Welding cables

Keep these as short as possible

Connect the work cable to the work piece as close as possible to the area being welded.

Lay tem well away from other cables.

Do not place your body between your electrode and work cables.

– Equipotential bonding
– Workpiece grounding (earthing)
– Shielding

Shield the entire welding equipment and other equipment nearby.

ARC rays can burn.

- Visible and invisible rays can burn eyes and skin.
- Wear an approved welding helmet or suitable clothing made from durable flame-resistant material (leather, heavy cotton, or wool) to protect your eyes and skin from arc rays and sparks when welding or watching.
- Use protective screens or barriers to protect other nearby personnel with suitable, non-flammable screening and/or warn them not to watch the arc nor expose themselves to the arc rays or to hot spatter or

material.

Fumes and gases can be dangerous

- Welding may produce fumes and gases, breathing these fumes and gases can be hazardous to your health.
- When welding, keep your head out of the fume. If inside, ventilate the area at the arc to keep fumes and gases away from the breathing zone. If ventilation is not good, wear an approved air-supplied respirator.
- Work in a confined space only if it is well ventilated, or while wearing an air-supplied respirator.
- Welding fumes and gases can displace air and lower the oxygen level causing injury or death. Always use enough ventilation, especially in confined areas, to insure breathing air is safe.

Welding and cutting sparks can cause fire or explosion.

- When not welding, make sure the electrode circuit is not touching the work or ground. Accidental contact can cause sparks, explosion, overheating, or fire. Make sure the area is safe before doing any welding.
- Welding and cutting on closed containers, such as tanks, drums, or containers, can cause them to blow up. Make sure proper steps have been taken.
- When pressure gas is used at the work site, special precautions are required to prevent hazardous situations.
- Connect work cable to the work as close to the welding zone as practical to prevent welding current from passing too long and creating fire hazards or overheat.
- Wear oil-free protective garments such as leather gloves, heavy shirt, cuffless trousers, high shoes, and a cap. Wear ear plugs when welding out of position or in confined places. Always wear safety glasses with side shields when in a welding area.
- Be attention that welding sparks and hot materials from welding can easily go through small cracks and openings to adjacent areas and start a fire. Remove fire hazardous from the welding area, if not possible, cover them thoroughly. Do not weld where flying sparks can strike flammable material and where the atmosphere may contain flammable dust, gas, or liquid vapors (such as gasoline).
- Protect yourself and others from flying sparks and hot metal. Remove any combustibles from operator before perform any welding.
- Keep a fire extinguisher readily available.
- Empty containers, tanks, drums, or pipes which have combustibles before perform welding.
- Remove stick electrode from electrode holder or cut off welding wire at contact tip when not in use.

Apply correct fuses or circuit breakers. Do not oversize or bypass them.

Cylinder can explode if damaged.

- Pressure gas cylinders contain gas under high pressure. If damaged, a cylinder can explode. Since gas cylinders are normally part of the welding process, be sure to treat them carefully.
- Cylinders should be located away from areas where they may be struck or subjected to physical damage. Use proper equipment, procedures, and sufficient number of persons to lift and move cylinders.
- Always install cylinders in an upright position by securing to a stationary support or cylinder rack to prevent falling over or tipping.
- Keep a safe distance from arc welding or cutting operations and any other source of heat, sparks, or flame.
- No touching cylinder by welding electrode, electrode holder or any other electrically “hot” parts. Do not drape welding cables or welding torches over a gas cylinder.
- Use only correct compressed gas cylinders, regulators, hoses, and fittings designed for the process used; maintain them and associated parts in good condition.
- Use only compressed gas cylinders containing the correct shielding gas for the and properly operating regulators designed for the gas and pressure used. All hoses, fittings, etc. should be suitable for the application and maintained in good condition.
- Open the cylinder valve slowly and keep your head and face away from the cylinder valve outlet.

Valve protection caps should be kept in place over valve expect when the cylinder is in use or connected for use.

Hot parts can burn

- Do not touch hot parts with bare hand or skin.
- Ensure equipment is cooled down before perform any work.
- If touching hot parts is needed, use proper tools and/or wear heavy, insulated welding gloves and clothing to prevent burns.

Flying metal or dirt can injure eyes

- When welding, chipping, wire brushing, and grinding can cause sparks and flying metal. It can hurt your eyes.
- Remember wear appropriate safety glasses with side shields when in welding zone, even under your welding helmet.

Noise can damage hearing

- Noise from some processes or equipment can damage hearing.

Remember wear approved ear protection to protect ears if noise level is high.

Moving parts can injure

- Stay away from moving parts such as fans.
- Stay away from pinch points such as drive rolls.
- Keep all doors, panels, covers, and guards closed and securely in place.

- Have only qualified persons remove doors, panels, covers, or guards for servicing and maintenance.
- Reinstall doors, panels, covers, or guards when servicing and maintenance is finished and before reconnecting input power.

Overuse can cause overheating

- Use machine follow duty cycle. Reduce current or reduce duty cycle before starting to weld again.
- Allow cooling period.

Do not block or filter airflow to unit.

Safety markings

Equipment with CE-markings meets the basic requirements of the Low-Voltage and Electromagnetic Compatibility Guideline (e.g. relevant product standards according to EN 60974).

Safety markings

Equipment with CCC markings meets the requirements of implementations rules for China compulsory certification（e.g. relevant product standards according to GB/T 15579.1/IEC60974.1）.

Safety markings

CSA marked equipment meets the requirements of the North American market safety certification implementation rules (e.g. relevant product standards according to CAN/CSA-E60974,ANSI/IEC 60974)

Contents

1-GENERAL REMARKS 9

1-1 Power source features.....9

1-2 Functional principle.....9

1-3 Output characteristics.....10

1-4 Duty cycle.....10

1-5 Applications.....11

1-6 Warning label 11

2-VERSIONS BRIEFS 12

3-BEFORE COMMISSIONING 12

3-1 Utilization for intended purpose only 12

3-2 Machine installation rules 12

3-3 Power source connection 13

3-4 Welding cables instruction 13

4-PoWer ARC 500.....15

4-1 System components.....15

4-2 Basic equipments for welding 15

4-3 Interface 16

4-4 Control panel.....17

4-5 Control socket 19

4-6 Installation and operation.....19

4-7 Technical data.....23

4-8 Dimension 23

4-9 Disassembly and reassembly 24

5-REMOTE CONTROLLER.....27

5-1 Wire remote controller for ARC.....27

5-2 Wireless remote controller 28

6-TROUBLE SHOOTING.....30

7-CARE AND MAINTENANCE.....32

1-GENERAL REMARKS

1-1 Power source features

The rated current of the machine is 500A,which are high-efficient and energy-saving DC Arc welding machine. Enjoy reasonable static characteristic .
Features and benefits:
- Strong ability against power grid fluctuation and arc length change. Strong capacity of arc self-adjustment.
- Soft switch technology, high efficiency.
- High duty cycle, small size, light weight.
- Continuous adjustment of welding current with wide range.
- It is suitable for welding with Cellulose Electrodes.
- Less spatter, high deposition rate, less welding deformation, pretty weld formation.
- Suitable for long distance welding, up to 50 meters.
- Digital display for accurate parameter preset.
- Easy arc-start.
- Wire/ Wireless remote control.

1-2 Functional principle

This series welding machines apply IGBT soft switch inverter technology. 3- phase input volt are rectified by rectifier, inverted into HF AC, reduced by HF transformer, rectified and filtered by HF rectifier, then output DC power suitable for welding. After this process, the welding machine dynamical responsive speed has been greatly increased, so the size and weight are reduced noticeably result in energy saving. Power source enjoy sound anti-fluctuation ability and high quality performance during external context changes (such as fluctuation in input power supply and extended welding cables). The schematic diagram is as shown in Fig. 1-2-1:

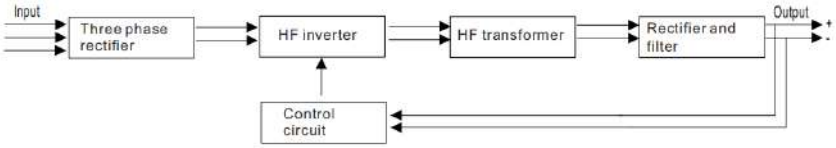

Fig. 1-2-1: Schematic diagram

1-3 Output characteristics

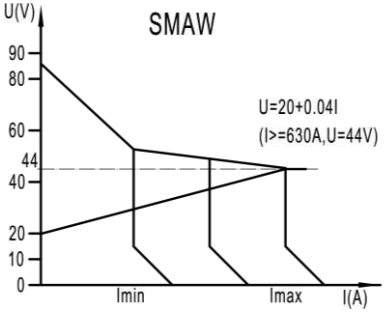

Fig. 1-3-1: Output characteristics

1-4 Duty cycle

Duty cycle is percentage of 10 minutes that a machine can weld at rated load without overheating. If overheats, thermostat(s) will open, output stops. Wait for fifteen minutes for the machine to cool down. Reduce amperage or duty cycle before welding.

Note! Exceeding duty cycle can damage unit and void warranty.

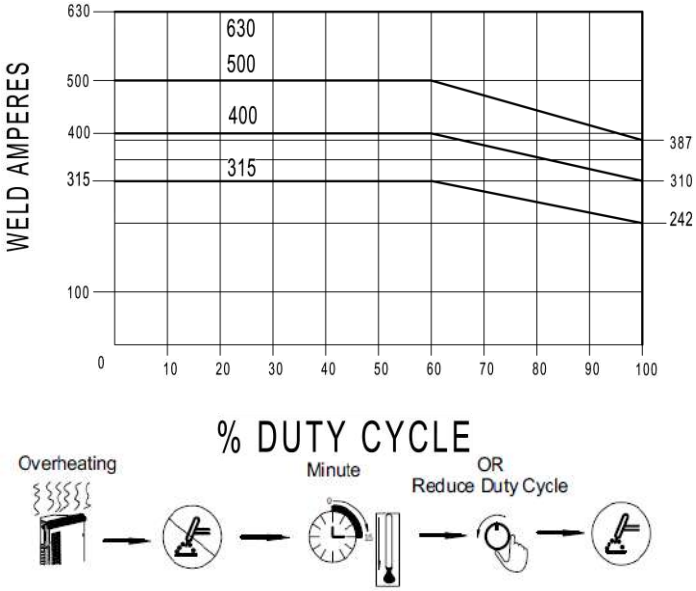

Fig. 1-4-1: Duty cycle

1-5 Applications

It is not only used in carbon steel and low alloy steel welding, but also used in stainless steel, high alloy steel, copper, silver, molybdenum and titanium welding. The power source is designed for the following recommend areas:

- Shipbuilding and offshore engineering
- Pipeline industry
- Shipyard
- Boiler and container manufacture
- Aerospace industry
- Chemical structure and engineering
- Power construction
- Automobile, vehicle manufacture
- Mechanical industry
- Maintenance and repair

1-6 Warning label

The warning label is affixed onto the top of the power source, and it must not be removed or painted over.

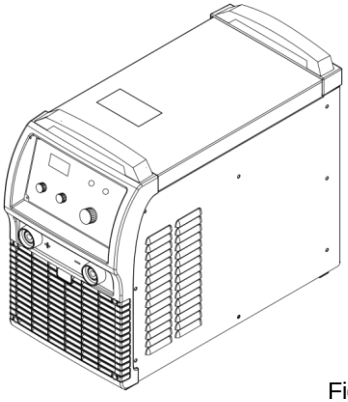

Fig. 1-6-1: Warning label

2-VERSIONS BRIEFS

Professional welding of special materials requires special welding parameters. Different models of the power sources are matched to different welding.

- **PoWer ARC 500**

The power sources have logical arranged control panel for convenient operation, which can perform SMAW and Gouging (≥500A). Welding cable can be extended to 50m.

3-BEFORE COMMISSIONING

Warning! Operating the equipment incorrectly can cause serious injury and damage. Do not use the functions described here until you have read and completely understood “safety rules”.

3-1 Utilization for intended purpose only

The power source may only be used for STICK ,TIG and GOUGING. Utilization for other purposes, or in any other manner, shall be deemed to be "not in accordance with the intended purpose". The manufacturer shall not be liable for any damage resulting from such improper use.Operate, inspect and maintain should follow all the instructions given in this manual.

3-2 Machine installation rules

According to test, protection degree of this power source is IP23. However, the internal key components must be protected from direct soaking.

Warning! A machine that topples over or falls from its stand can cause injury. Place equipment on an even, firm floor in such a way that it stands firmly.

The venting duct is very important for safety protections. When choosing the machine location, make sure it is possible for the cooling air to freely enter and exit through the louvers on the front and back of machine. Any electro conductive metallic dust like drillings must not be allowed to get sucked into the machine.

3-3 Power source connection

- The power source is designed to run on the voltage given on the nameplate.
- The mains cables and plugs must be mounted in accordance with the relevant technical standards.
- The power supply sockets that come with power source are designed to use strictly according to the marked voltages.

Note! Inadequately dimensioned electrical installations can lead to serious damage. The mains lead, and its fuse protection, must be dimensioned in accordance with the local power supply. The technical data shown on the nameplate shall apply.

3-4 Welding cables instruction

When welding, please pay attention to the followings:

a. The welding cables should be kept as short as possible;

b. If extended cable is used, please do as shown in Fig. 3-4-1.

Wrong Coil the excess ground cable and welding cable in same direction respectively.	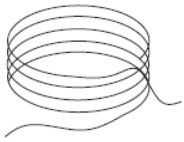
Correct Straighten the ground cable and welding cable and make them close to each other. Bundle the ground cable and welding cable together, running the wires close to the ground.	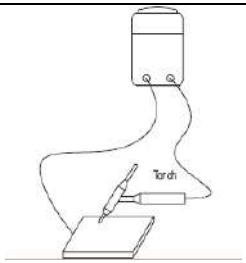

Correct When the excess cables are only be used by rolling up, coil the cables to two windings in reverse direction and overlap them. The number of turns for A is same as the number for B. Handle the welding cable and ground cable according to above-mentioned method.	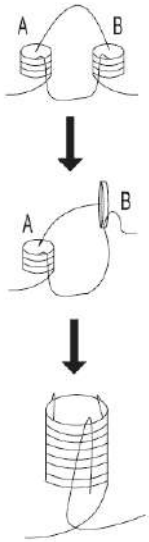

Fig. 3-4-1: Welding cables instruction

4-PoWer ARC 500

4-1 System components

This series of machines can be equipped with many different accessories.

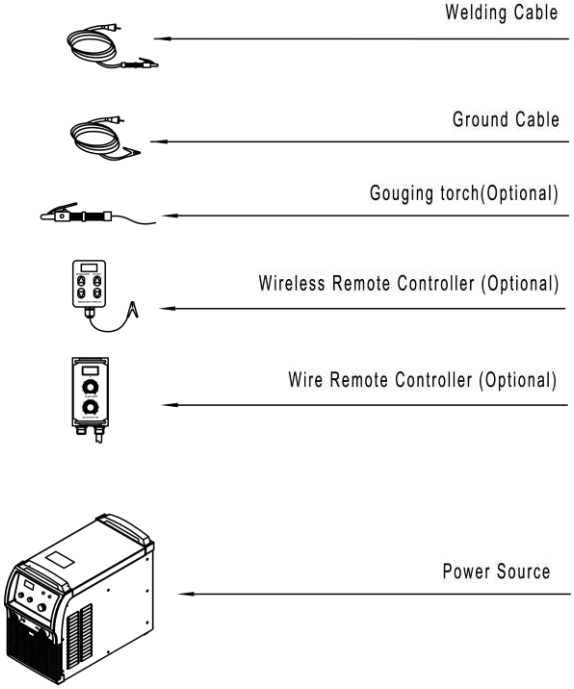

Fig. 4-1-1: System components

4-2 Basic equipments for welding

Basic equipments are needed for normal welding. Below are the lists:

● **SMAW**

- Power source
- Ground cable
- Electrode holder
- Electrode

● **GOUGING**

- Power source
- Ground cable
- Gouging torch

- Carbon rod
- Air compressor

4-3 Interface

Note! You may find that your machine has certain functions or some parameters that are not described in this operating manual. Also, certain illustrations may be very slightly different from the actual controls on your machine. However, these controls function in exactly the same way.

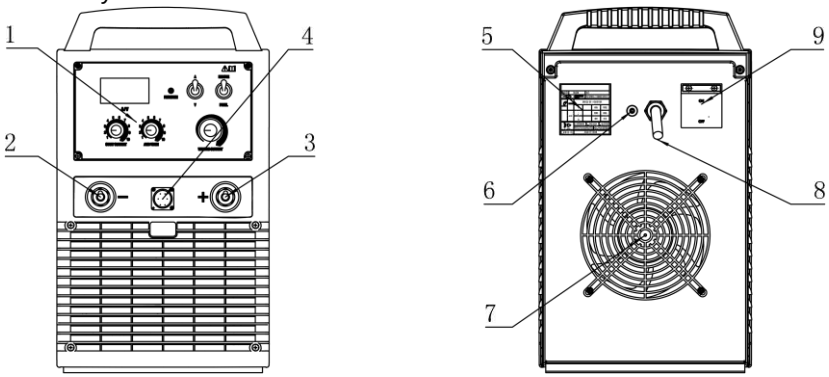

Fig. 4-3-1:interface

1.Control panel

Presetting and display of welding parameters

2.Positive output terminal (+)

Connect with electrode holder via welding cable in SMAW.

In Gouging, it is connected to the gouging torch.

3.Negative output terminal (-)

Connect with work piece via ground cable.

4.Remote control socket

It is used to connect to the wire remote controller with remote control cable, then user can adjust welding current, arc force current on “Remote control” mode. It is convenient to realize welding control in extended distance.

5. Nameplate

6. Fuse

7. Cooling fan

Cool down the heat components in the welding machine.

8. Power cord

It is 4-pin cable. The mixed-colored wire must be firmly grounded(PE), the rest wires connect to corresponding power supply.

9.Circuit breaker

The function of circuit breaker is to protect welding machine and operator by automatic trip to turn-off power supply when overload or short circuit happens to the power source. Normally, the switch flipped to upward means power-on. To start or stop the welding machine is done by the mains switch in the distribution box. Please do not take this circuit breaker as the power switch.

4-4 Control panel

The functions on the control panels are all arranged in a very logical way. The various modes and parameters needed for welding are easy to select by pressing the appropriate button; parameters are easy to be adjusted by knob.

Note! Some described parameters in this manual may be slightly different from the power source, some identification may be slightly different from power source identification, but the manner of working is the same.

Warning! Operating the equipment incorrectly can cause serious injury and damage. Do not use the functions described here until you have read and completely understood all content of this manual.

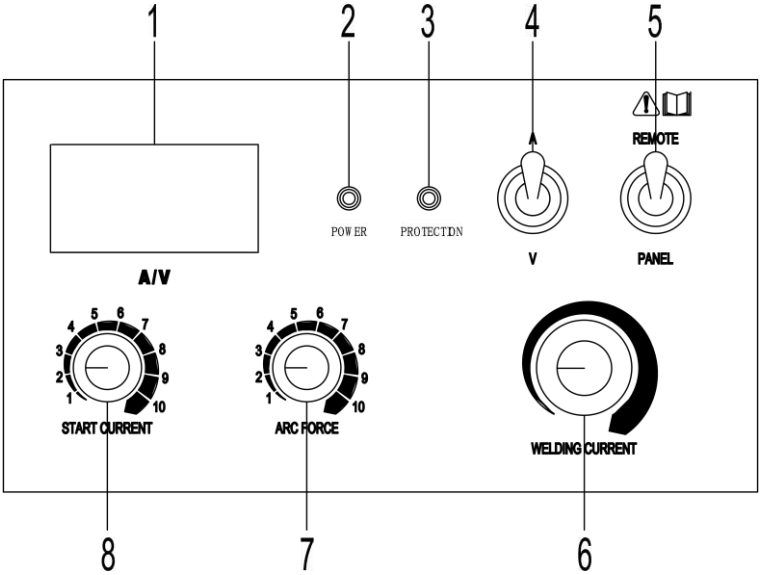

Fig. 4-4-1:Control panel

1.“Amp/Volt” display

When display mode switch indicates to “A”:

LCD display preset current value, Min. current is 20A;

LCD display real welding current during working.

When display mode switch indicates to “V”,

LCD display voltage between output terminals of welding machine.

2.Power indicator

Indicator indicates when power source is power on.

3.Protection indicator

Welding machine will automatically stop working when it is overheat, and the indicator will light up.

4.“A/V” display mode selection switch

5.“Remote / Panel” switch

When it is on “Panel”, you can adjust welding current, arc force current by the knobs on the machine panel; when it is on “Remote’, you can adjust the welding current, arc force current through remote controller.

6.“Welding current” knob

It is used to adjust welding current on panel control mode.

Preset proper welding current according to work piece thickness, groove shapes, welding position, wire diameter, etc. Welding current decides welding seam depth and wire molten rates.

7.“Arc force current” knob

It is used to adjust arc force current on panel control mode.

When welding, short circuit between wire and work piece may occur because of operation or droplet transfer. In order to avoid short circuit or wire stick, when arc voltage is low, increase current to shorten the droplet transfer time.

8.”Start current” knob

It is used to adjust arc starting current under SMAW mode.

Before start arc, work piece is on cold state, increase arc start current so as to improve heat input, which makes the arc start easier.

4-5 Control socket

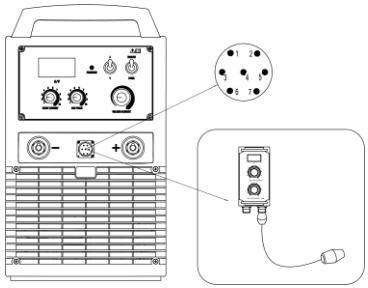

Pin no.	Description
1-2	Null
3	Power supply 9VDC
4	Remote welding current signal
5	Power GND
6	Remote arc force current signal
7	Remote controller display signal

Table 4-5-1: Connections

4-6 Installation and operation

Warning! Electric shock is very dangerous. If the machine is plugged into the mains electricity supply during installation, there is a high risk of very serious injury and damage. Only carry out work on the machine when

- the mains switch is in the “OFF” position,
- the machine is unplugged from the mains.

● **Installation environment requirements**

1. It should be placed indoors without direct sunlight, rainproof, low humidity and less dust. The ambient air temperature range is -10℃~+40℃.
2. The inclination to the ground should not exceed 10°.
3. There should be no wind in the welding station, if any, it should be covered.
4. The welding machine is more than 20cm away from the wall, and the distance between the welding machine is more than 10cm.
5. When using water-cooled welding torch, pay attention to anti-freezing.

● **power supply and cable requirement**

Please note the size of fuse and circuit breaker in the table below are for reference only.

Model		500
Power supply		3 phase, AC400V ±10%, 50/60Hz
Min. power	Power network	38

capacity (KVA)	Generator	60
Input protection (A)	Fuse	63
	Circuit breaker	100
Min. cable size (mm^2)	Input cable	6
	Output cable	50
	Protective GND wire	6

Table 4-6-1: power supply and cable requirement

Note! Welding machine must be taken special design if it is powered by generator, please contact with manufacturer if you have such needs.

● **Connections of power cord and distribution box**

Warning!

- Never connection when equipment is power on!
- The connection must be carried out by a qualified electrician!
- Do not connect two units of power sources to the same one circuit breaker!.
- Connected to the correct input voltage, circuit breaker, power cord as per the specification on Table 4-6-1.

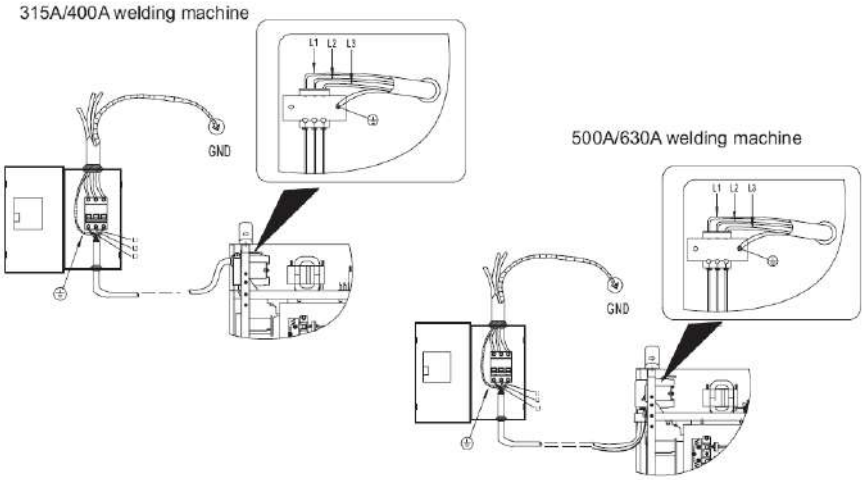

Yellow-Green protective GND wire is used for grounding! Not zero wire! Please connect according to picture or other correct way. Please disconnect mains power when connecting!
If main case is grounded, this cable needs no grounding.

Fig. 4-6-1: Connections of power cord and distribution box

- **Installation and Operating**

Warning! Operating the welding machine incorrectly can cause serious injury and damage. Do not use the functions described here until you have read and completely understood all the following guides:

“safety rules”

“before commissioning”

Warning! Electric shock is very dangerous. As soon as the power source is switch on, the welding electrode is power on. Make sure that the electrode does not touch any person or conductor or grounded parts (e.g. lifting appliance etc.)

SMAW welding with basic electrode: E7016/E7018

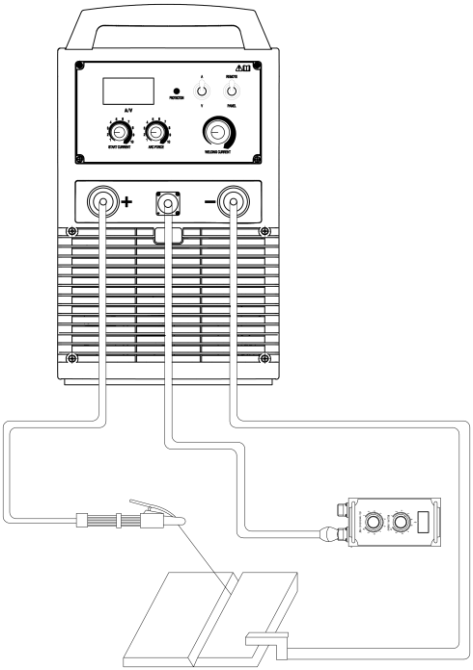

Fig. 4-6-2:SMAW welding process installation

1.Connect electrode holder with output terminal (+), connect work piece with output terminal (-);

2.Place switch on “ON” position, power on;

3.Choose “Panel control” mode on control panel;

4.Choose “Amp/Volt” switch on “Amp” position;

5.Adjust arc start current, arc force current, welding current according to electrode diameter, welding position;

6.Welding

Gouging process

Note! “GOUGING” process only is available for the machine which rated current is ≥500A.

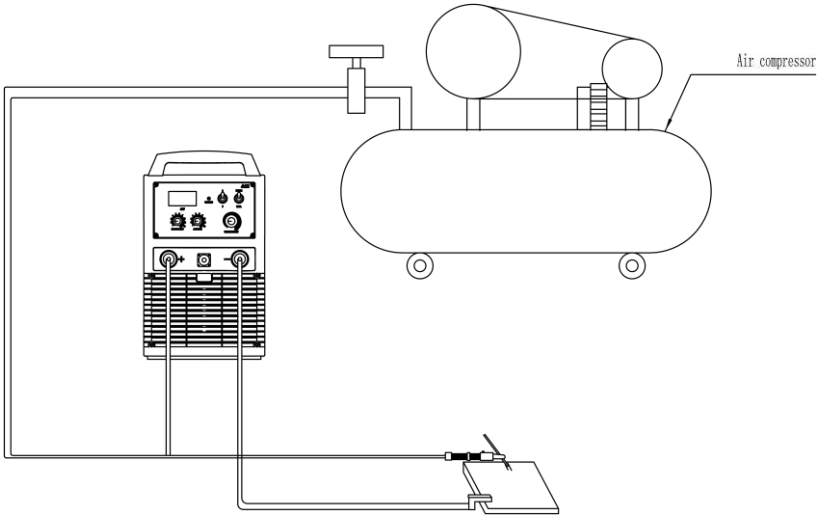

Fig. 4-6-3:GOUGING process installation

1.Power off;2.Plug one end of the ground cable to the output terminal (-);

3.Connect the other end of the ground cable to the work piece;

4.Plug the gouging torch cable to output terminal (+);

5.Connect the gas hose to gas outlet of the air compressor or other gas supply tube;

6.Power on;

7.Select “SMAW” by the SMAW/TIG switch on front panel;

8.Set the required current value by rotating “welding current” knob;

9.Increase arc force current properly;

10.Open the gas valve of the compressed air, and regulate the needed shielding gas flow and pressure;

11.Choose proper carbon rod according to current;

12.Open gas valve on gouging torch, make gas flow towards to work piece;

13.Start Gouging.

4-7 Technical data

Note! Please use the machine under the allowed power supply voltage range marked in the nameplate. The technical data with the basic input voltage are listed as the Table 4-7-1.

Model	PoWer ARC 500
Primary power voltage	3 phase, AC400V±10%, 50/60Hz
Rated output capacity (KW)	20
Rated input current (A)	36
Rated duty cycle (%)	60
Range of output current (A)	20~500
Arc-force current (A)	15~250
Arc-starting current (A)	0~75
Open circuit voltage (V)	86
Protection class	IP23
Full-load efficiency (%)	89
Power factor	0.95
Electrode diameter (mm^2)	2~6
Weight (Kg)	50
Dimension (mm^3)	670*330*572
Insulation class	H

Table 4-7-1: Technical data

4-8 Dimension

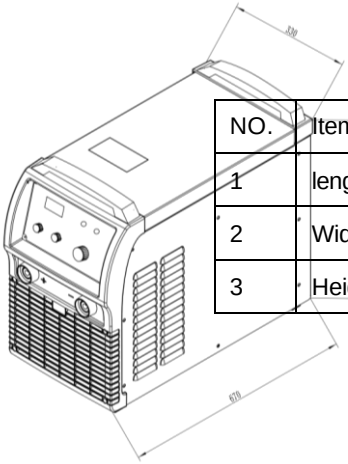

NO.	Item	Unit(mm)	Unit(inches)
1	length	670	26.4
2	Width	330	13
3	Height	572	22.5

Fig. 4-8-1: Dimension

Table. 4-8-1:Dimension

4-9 Disassembly and reassembly

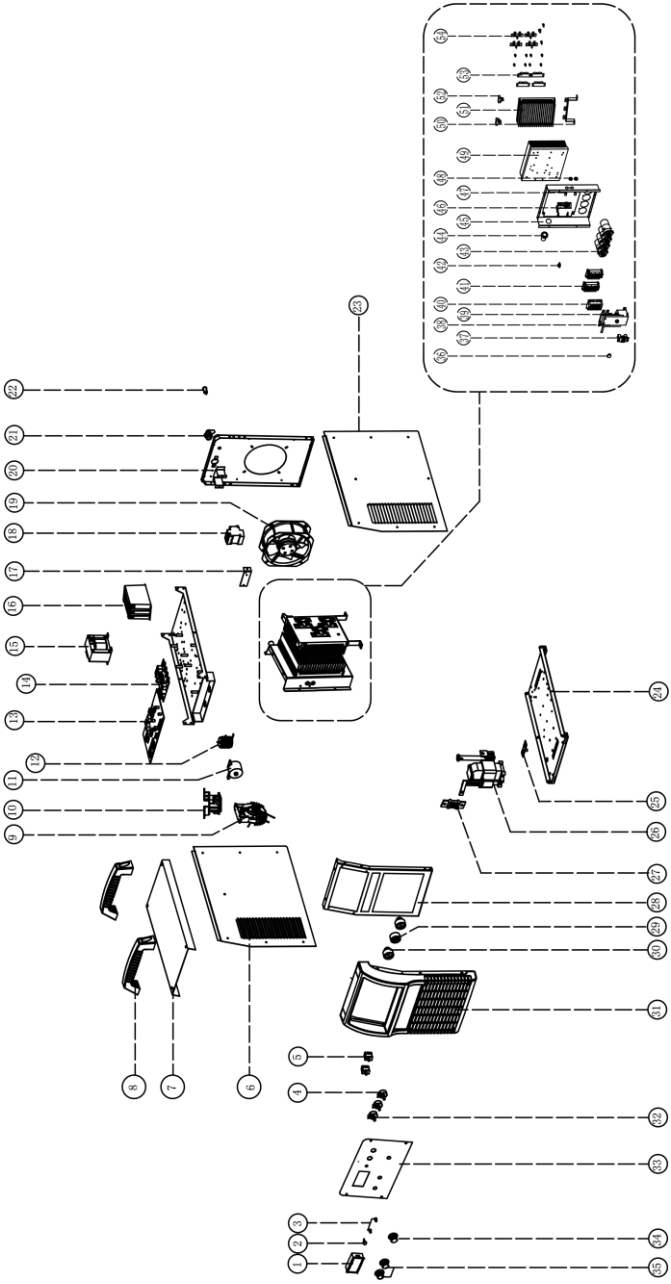

Fig.4-9-1 Disassembly and reassembly

No.	Item	Stock No.for 500	Remarks
1	Digital display	755001-00023	
2	Indicator light (red)	715002-00026	
3	Waterproof cap	745090-00003	
4	Potentiometer	720031-00030	
5	Toggle switch	745003-00008	
6	Left plate	262017-00801	
7	Top plate	262029-00436	
8	Handle	766003-02388	
9	Main transformer	220629-00163	
10	Current exchange inductor	220281-00008	
11	Resonance capacitor	722001-00074	
12	Resonance inductor	220521-00004	
13	Main control board	210580-00134	
14	Drive board	210310-00096	
15	Power transformer	763001-00052	
16	Filter	752004-00017	
17	Circuit breaker pressure plate	766003-00188	
18	Circuit breaker	745011-00021	
19	Fan	746001-00087	
20	Rear plate	262023-00766	
21	Cable	769001-00028	
22	Fuse holder	740007-00004	
23	Right plate	262023-00585	
24	Bottom plate	263065-00461	
25	Rack capacitor board	220293-00043	

26	Output reactor	763004-00010	
27	Shunt	720041-00010	
28	Front panel	262005-01039	
29	Control socket	740001-00030	
30	Quick socket	740002-00026	
31	Plastic front panel	262005-01040	
32	Potentiometer	720031-00042	
33	Control panel	262035-00327	
34	Potentiometer knob	720031-00138	
35	Potentiometer knob	720031-00137	
36	Varistor	720021-00017	
37	Input filter inductance	220479-00002	
38	IGBT protection board	220005-00135	
39	Polypropylene	722001-00070	
40	Three phase rectifier module	735005-00002	
41	IGBT module	735007-00048	
42	Temperature relay	745008-00042	
43	Polypropylene capacitor	722001-00062	
44	Over-the-line rubber ring	773005-00020	
45	IGBT radiator bracket	766002-00090	
46	Current transformer board	220149-00136	
47	Nylon column	776019-00030	
48	Over-the-line rubber ring	773005-00002	
49	IGBT radiator	264005-00090	
50	Radiator support frame	766002-01192	
51	Output diode radiator	264011-00116	

52	Radiator support	766002-00090	
53	Fast recovery diode module	735006-00029	
54	Diode protection board	220455-00002	

Table.4-9-2 Main spare parts

Note: This table is for reference only, and the detail of actual product shall prevail.

If no special remarks, the input voltage mentioned in above table is three phase.

5-REMOTE CONTROLLER

5-1 Wire remote controller for ARC

The analog wire remote controller can be used for current regulation of this series power sources.

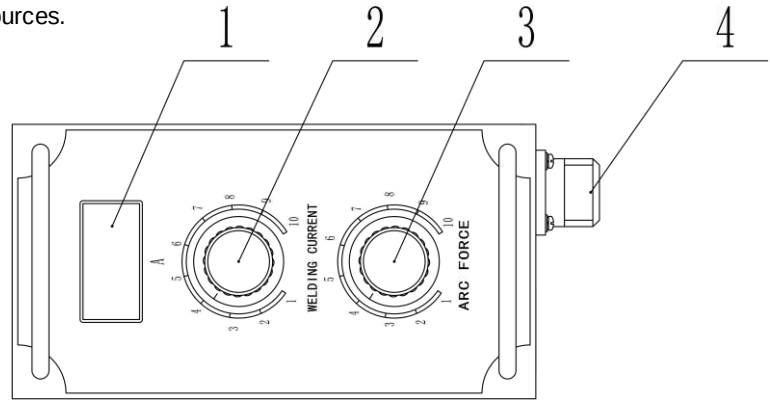

Fig. 5-1-1: Remote controller

1. “Amp” digital display

It displays preset value while in open load, and displays real value of welding current while in actual working.

2. “Welding current” regulation knob: same function with welding machine knob.

3. “Arc force current” regulation knob: same function with welding machine knob.

4. Socket: connect to remote control cable

Operating guide:

1.Connect welding machine control socket and remote controller (socket 4, Fig. 6-1-1) via 7-pin control cable;

2.Choose “Remote control” on welding machine control panel;

3.Adjust proper welding current, arc force current.

5-1-1 Spare parts

NO.	Item	Stock NO.	Qty	Remarks
1	Digital display	220545-00002	1	
2	Potentiometer	720031-00028	2	4.7KΩ
3	Potentiometer knob	720031-00070	2	
4	Control socket	740001-00030	1	

Table.5-1-1 spare parts

5-2 Wireless remote controller

Note: Welding equipment with high-frequency or high-voltage arc ignition can damage the remote control. Avoid working with such equipment on the same work piece or in the same area.

The wireless remote controller adopts MCU controller to modulate given signal. Signal is transferred to welding machine by welding cable, then modulated and turned into given signal. It needs no external wire comparing with wire remote controller, and easy to use.

Features are as follows:

- Wireless control, reducing the failure rate, reduced maintenance costs;
- Digital display, accurate display, convenient to set up parameter;
- Long distance control is up to 100m, operator can adjust the welding current and arc force current remotely;
- Two methods to adjust, fast adjustment /slow adjustment;
- Magnetic bottom design, easy to attach on welding base plate, which can prevent falling and is convenient for operating;
- Compact design can be effective anti-raining, light weight, easy to carry.

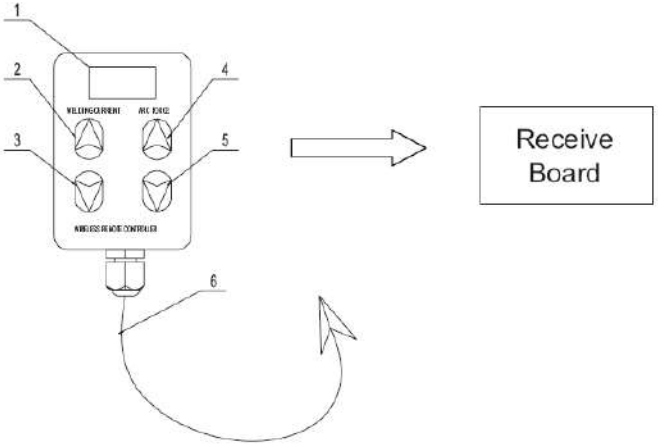

Fig. 5-2-1. Wireless remote controller

1.Current digital display

Indicate welding current when adjust welding current.

Indicate arc force current when adjust arc force current.

The initial display is welding current.

2.Welding current increasing button

Press the button to increase welding current value.

Hold the button will increase welding current at a faster pace.

3.Welding current decreasing button

Press the button to decrease welding current value.

Hold the button will decrease welding current at a faster pace.

4.Arc force current increasing button

Press the button to increase arc force current value.

Hold the button will increase the arc force current at a faster pace.

5.Arc force current decreasing button

Press the button to decrease arc force current value.

Hold the button will decrease the arc force current at a faster pace.

6.Clamp

Used to connect with conductive part of electrode holder.

Parameter adjustment range

Item / Model	WY-315	WY-400	WY-500
Welding current (A)	20-315	20-400	20-500

Arc force current (A)	0-160	0-200	0-250

Table 5-2-1: Parameter adjustment range

Operating guide

1.Set the control mode at “Remote control”on welding machine control panel;

2.Attach the remote controller to the work piece, and ensure good contact;

3.Connect the clamp with electrode holder to supply power to remote controller;

4.The digital display shows the current value; adjust the welding current and arc force current in accordance with the welding requirements;

5.Remove the clamp from the electrode holder or remove remote controller from work piece when complete the regulation, and be ready for welding.

Important:

- Ensure the remote controller is grounded well, and the clamp connect with electrode holder tightly;
- Avoid electrode holder contacting with remote controller and cause sparking;
- Avoid contacting work piece when clamp connects electrode holder tightly;
- Avoid impacting the remote controller and cause deformation.

6-TROUBLE SHOOTING

Warning! An electric shock can be fatal. Before opening the machine:

- Switch it off and unplug it from the mains
- Unplug machine from the mains
- Put up a clearly legible and easy-to-understand warning sign to stop anybody inadvertently switching it back on again
- Check to make sure the electrically charged components (e.g.capacitors) have been discharged.
- Bolt in outer case also works for ground connection. Never use other bolt, which can not work for ground connection.

Note! The following troubles and causes are uncertain. However, during the normal welding, that might happen.

No	Problem	Cause	Remedy
1	After power on, it doesn’t work	Phase missing Fuse (2A) in welding machine is broken Cable is broken	Check power source Check if the fan, power transformer and main control board is damaged

			Check connection
2	Circuit breaker on rear panel trips while the machine is working normally	The following components may be damaged: IGBT module, 3-phase rectify module, output diode module, or other components Drive board is damaged Short circuit of the cable	Check and replace When IGBT Module is damaged, please check 12Ω, 5.1Ω resistance or SR160 on drive board is damaged or not Check and repair
3	Welding current is unstable	Phase missing The following components may be damaged: potentiometer, switches on front panel and remote control cable, potentiometer on remote controller Main control board is damaged	Check power source Check and replace Check and replace
4	Welding current is not adjustable	Welding current adjustment knob is damaged Remote control cable is broken Main control board is damaged The switch on the front panel is damaged	Check and replace
5	TIG welding is abnormal	TIG torch trigger is damaged Remote control cable is broken The tungsten electrode in welding machine is in the wrong position Main control board is damaged	Check and replace

Table 6-1: Trouble shooting

7-CARE AND MAINTENANCE

- **Before open the machine**

Warning! An electric shock can be fatal. Before opening the machine:

-Switch it off and unplug it from the mains

-Put up a clearly legible and easy-to-understand warning sign to stop anybody inadvertently switching it back on again

-Check to make sure the electrically charged components (e.g.capacitors) have been discharged

-Bolts in outer case also work for ground connection. Never use other bolt that can not work for ground connection

- **Maintenance of welding power source**

Please follow the instructions as below to ensure normal use of power source

- Conduct safety check at regular intervals (see “Safety rules”)
- Dismantle machine side panels and clean machine inside with clean and low-pressure compressed air by professional technician, not less than twice per year. Clean the components at a certain distance only
- If a lot of dust has accumulated, clean the cooling-air ducts

- **Maintenance of water-cooled welding torch**

For water cooled welding torch:

- Check the connections of water cooling system
- Check the coolant level, cleanliness of coolant etc. (clean coolant only)
- Frequently check coolant’s back flow state

- **Daily maintenance**

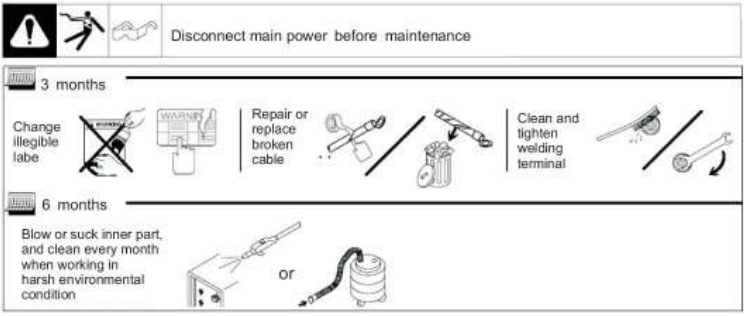

Fig.7-1: Daily maintenance

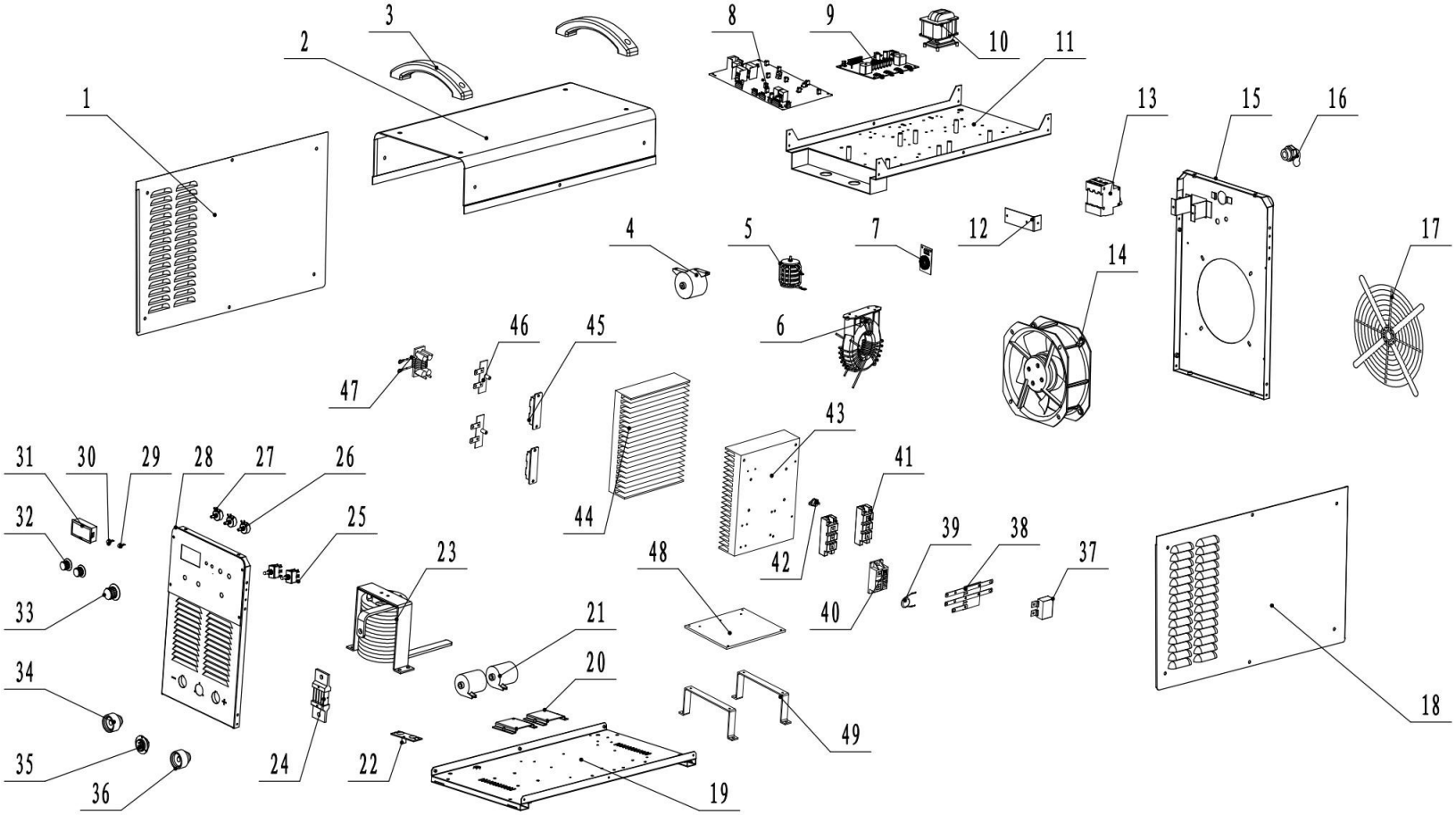
1
2
3
4
5
6
7
8
9
10
11
12
13
14
15
16
17
18
19
20
21
22
23
24
25
26
27
28
29
30
31
32
33
34
35
36
37
38
39
40
41
42
43
44
45
46
47
48
49

No.	Item	Stock No.ARC500	SAP KODU
1	Left plate	262017-00629	
2	Top plate	262029-00467	
3	Handle	766003-00138	
4	Resonance capacitor	722001-00075	
5	Resonance inductor	220521-00029	
6	Main transformer	220629-00016	
7	Current transformer	220149-00007	6064100372
8	Main control board	210580-00198	
9	Drive board	210310-00032	6064000196
10	Power transformer	763001-00052	6064100594
11	Mid-layer board	263071-00130	
12	Circuit breaker fix plate	766003-02578	
13	Circuit breaker	745011-00026	
14	Fan	746001-00035	6064000358
15	Rear plate	262011-00794	
16	Cable	769001-00093	
17	Fan cover	766003-02403	
18	Right plate	262023-00614	
19	Bottom plate	263065-00112	
20	Input capacitor bracket	766002-00104	6064100192
21	capacitor	722001-00070	
22	Rack Capacitor Board	220293-00012	
23	output reactor	763004-00010	
24	Shunt	720041-00010	
25	Toggle switch	745003-00008	
26	Potentiometer	720031-00030	
27	Potentiometer	720031-00042	
28	Front panel	262005-00251	
29	Light（yellow）	715002-00025	
30	Light（red）	715002-00022	
31	Digital display	755001-00023	6064000461
32	Potentiometer knob	720031-00138	
33	Potentiometer knob	720031-00137	
34	Quick socket	740002-00027	
35	Control socket	740001-00030	
36	Quick socket	740002-00027	6064200534
37	Polypropylene capacitor	722001-00014	
38	IGBT protection board	220005-00008	
39	Varistor	720021-00017	
40	Three phase rectifier module	735005-00003	
41	IGBT module	735007-00073	
42	Temperature relay	745008-00044	
43	IGBT radiator	264005-00088	

44	Output diode radiator	264011-00027	
45	Fast recovery diode module	735006-00029	6064100173
46	Diode protection board	220455-00002	6064000200
47	Current exchange inductor	220281-00012	6064100378
48	Radiator connecting plate	775004-00009	
49	Radiator support frame	766002-00079	

Manufacturer

Üretici: Shandong Aotai Electric Co., LTD.
Üretici Adresi: 282 Bole Ave, High-tech Development Zone, Jinan, Shandong 250101, P.R. China
İletişim bilgileri:
Tel: +86-531-81921006
Fax: +86-531-88876665

Importer
İthalatçı: Gedik Kaynak San ve Tic A.Ş.
İthalatçı Adresi: Ankara Cad No: 306 Seyhli 34906 Pendik, İstanbul/Türkiye
İletişim Bilgileri:
Tel: +90-216-3785000
Fax: +90-216 3782044

PoWer ARC Series

GeKaMac®

Gedik Welding Inc.
Ankara Caddesi No: 306 Şeyhli 34906 Pendik - İstanbul / Turkey
P. +90 216 378 50 00 • **F.** +90 216 378 20 44
www.gedikwelding.com